Luminux Aqua-Mini Twins CCT Tunable LED Downlight

Luminux is proud to present you the Daniel Alexandra design Tunable series LED downlight which is perfect for the retail shops, hotels, restaurants, museums and most of commercial and architectural lighting. This unique colour temperature tunable design allows the users to tune the color temperature from 2000K to 3000K in accordance with their needs. It adopts Tunable Multichips-Array LED system technology which can produce up to 1260 lumen with 18W only. The highest color rendering option can be up to 94CRI. It is now possible to reduce energy consumption and maintenance costs without compromising on light quality and ambience.

Features

Italian Simple and Classic Design
Aluminum Cooling System
Cree, USA Multichips-Array LED System
Ultra-easy Installation
Power Consumption: 9Wx2
Directional: +/-30°
Super Long Life - 70% maintenance of lumen after 50000 hours
Super High Color Rendering: CRI94
Wide Selection of Beam Angles:
LENS Options: 15°, 24°, 36°, 60°. Reflector Options: 15°, 28°, 40°, 60°
Dimming Options: TRIAC
Power factor: >0.94
RoHS Compliant
UV and IR Free

Product Offering

Item	LED Color Options	Beam Angle Options	Finishing	Power Supply	CRI	Watt	Lumen	Note
Aqua-MT18WT	◐ 2000K-3000K	LENS: 15°	□ White	220-240VAC	94	9Wx2	1260	Remote LED Driver
		LENS: 24°	■ Black					
		LENS: 36°						
		LENS: 60°						

Application Information

Retail Shops
Hotels
Window Display
Spot Lighting
Commercial Lighting
Office Lighting

Dimension

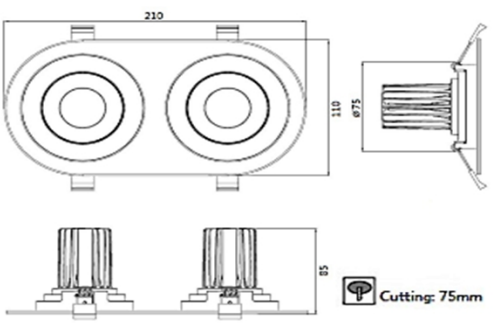

IP20